QUARTZ CRYSTALS MHz range SMD-version

model	KX - K
frequency range	3,50 ~ 70,0 MHz
mode	fundamental, 3rd overtone
operating temperature	standard -20° ~ + 70°C available -40° ~ + 85°C (=KX-KT)
frequency tolerance at +25°C	standard ± 30 ppm, available ± 10 ~ ± 50 ppm
temperature tolerance at -20° ~ +70°C -40° ~ +85°C	 standard ± 50 ppm, available ± 15 ~ ± 50 ppm standard ± 100 ppm, available ± 25 ~ ± 100 ppm
load capacitance C_L	standard: 16 pF, avail. 12 ~ 30 pF
series resonance R_1 max.	fundamental 3,5 ~ 3,99 MHz 150 Ohm 4,0 ~ 5,99 MHz 120 Ohm 6,0 ~ 7,99 MHz 80 Ohm 8,0 ~ 9,99 MHz 60 Ohm 10,0 ~ 40,0 MHz 50 Ohm 3rd overtone 35,0 ~ 39,99 MHz 100 Ohm 40,0 ~ 49,99 MHz 80 Ohm 50,0 ~ 70,0 MHz 50 Ohm
aging (first year)	± 5 ppm
shunt capacitance C_0 max.	7,0 pF
drive level in mW	0,1
RoHS	started from date code May, 2005
contents of reel	1000 pcs.
part no.	12.87800 ~ 12.87899

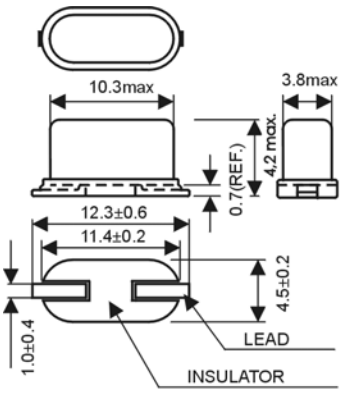

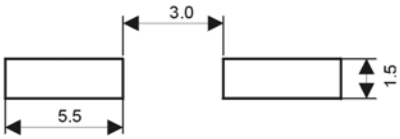

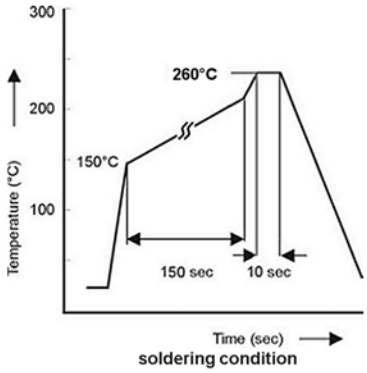

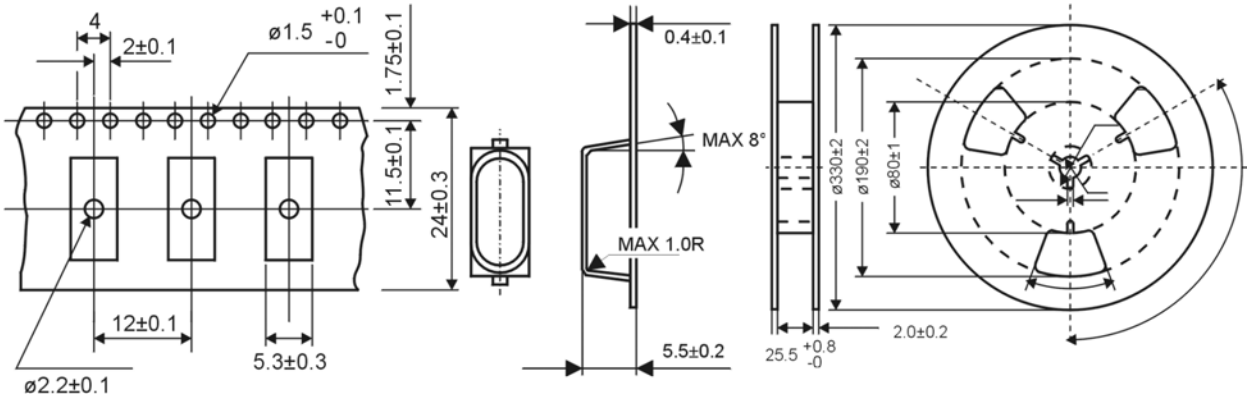

GEYER ELECTRONIC Lochhamer Schlag 5 82166 Gräfelfing/München
Tel. 089/546868-0 Fax 089/546868-91 quartz@geyer-electronic.de

21.11.2007